HOW TO WORK WITH THE MICROSCOPE. A COURSE LECTURES ON THE PRACTICAL USE OF THE INSTRUMENT AND MICROSCOPICAL MANIPULATION

Published @ 2017 Trieste Publishing Pty Ltd

ISBN 9780649608843

How to Work with the Microscope. A Course Lectures on the Practical Use of the Instrument and Microscopical Manipulation by Lionel S. Beale

Edited by Trieste Publishing Pty Ltd.
Cover @ 2017

www.triestepublishing.com

LIONEL S. BEALE

HOW TO WORK WITH THE MICROSCOPE. A COURSE LECTURES ON THE PRACTICAL USE OF THE INSTRUMENT AND MICROSCOPICAL MANIPULATION

Trieste

POCKET MICROSCOPE.

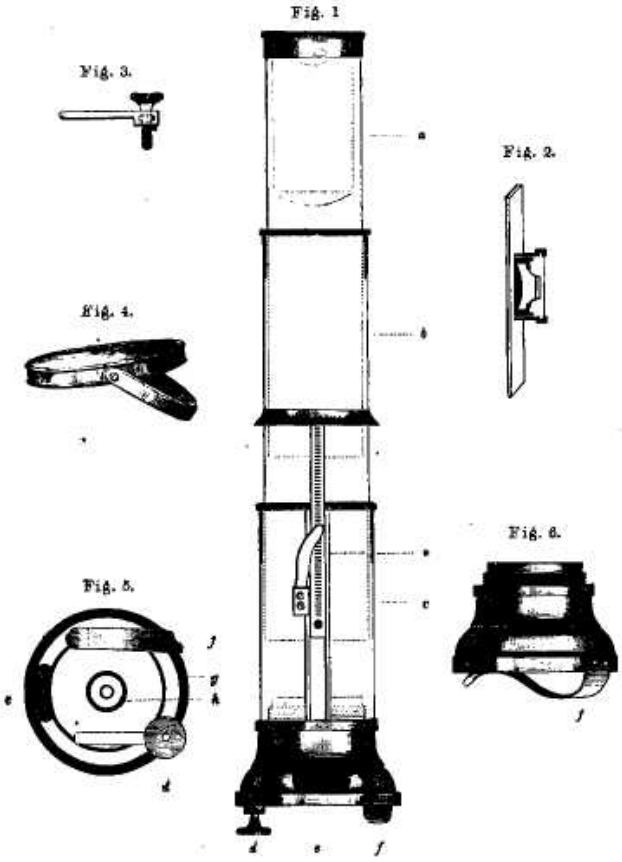

The drawing represents the instrument half the real size. When closed it is six inches in length. It may be employed for examining opaque and transparent objects with high or low powers, with day or artificial light.

[For description see page ix after the Preface.]

HOW TO WORK

WITH

THE MICROSCOPE.

A Course of Lectures

ON

THE PRACTICAL USE OF THE INSTRUMENT AND MICROSCOPICAL MANIPULATION.

BY

LIONEL S. BEALE, M.B., F.R.S.,

FELLOW OF THE ROYAL COLLEGE OF PHYSICIANS, PHYSICIAN TO KING'S COLLEGE HOSPITAL AND PROFESSOR OF PHYSIOLOGY AND OF GENERAL AND MORBID ANATOMY IN KING'S COLLEGE, LONDON; HONORARY FELLOW OF KING'S COLLEGE.

Illustrated Edition with 32 Plates, containing upwards of 150 Figures.

LONDON:
JOHN CHURCHILL, NEW BURLINGTON STREET,
1861.

PRINTED BY HARRISON AND SONS,
ST. MARTIN'S LANE, W.C.

DEDICATED

TO MY FRIEND

FERGUSON BRANSON.

PREFACE

TO THE

ILLUSTRATED EDITION.

WITH the view of increasing the usefulness of this work, numerous explanatory illustrations have been added in the present edition.

The author, both in the text and in the explanations to the engravings, has endeavoured to restrict himself, as far as possible, to giving hints and directions which may be practically useful to the student while he is at work. All matter that would be merely interesting to the general reader has therefore been altogether omitted. Directions for working cannot well be too explicit and precise, and the more simply they are given, the more useful they are likely to be.

The structure of the microscope, its history, the principles of its action and the appearance of various objects examined in it, are fully discussed in the larger works of Professor Quekett, Dr. Carpenter, Mr. Hogg, and others enumerated in the note on page 4, to which the reader is referred.

The Author trusts that the Student will carefully go through the tables commencing on page 104, as he feels satisfied that any one who will patiently submit to the routine and trouble, will be amply rewarded by the practical knowledge he will thus gain of the use of the instrument.

L. S. B.

61, *Grosvenor Street, January*, 1861.

PREFACE

TO THE

FIRST EDITION.

An earnest desire to assist in diffusing a love for microscopical inquiry, not less for the pleasure it affords to the student, than from a conviction of its real utility and increasing practical value in promoting advancement in various branches of art, science, and manufacture,—a wish to simplify as far as possible the processes for preparing microscopical specimens, and the methods for demonstrating the anatomy of different textures,—and the belief that many who possess microscopes are deterred from attempting any branch of original investigation solely by the great difficulty they experience in surmounting elementary detail and mere mechanical operations,—are my chief reasons for publishing this elementary course of lectures, which was delivered during the past winter.

It has been thought desirable to append the tables which I have been accustomed to use in my course of practical demonstrations, for the purpose of enabling everyone to practise for himself the most useful branches of manipulation. Each table will occupy the student about two hours.

Subjoined is a list of the apparatus required for microscopical research, much of which is simple and inexpensive. A number has been added to each instrument, by transmitting which to any instrument-maker, the observer will be furnished with the apparatus required.

L. S. B.

Pathological Laboratory,
27, Carey Street, Lincoln's-inn, June, 1857.